806.2 CHIPPER

806.2 CHIPPER

The 806.2 STC Bruks mobile chipper is an advanced model in our 800 series range and is an extremely popular size class for mobile chipping applications. It is an ideal choice for processing wood and forest residues for the production of biofuel chips, offering cost-efficiency and a superior chip quality.

With its size and capacity, the 806.2 STC model is a versatile machine for a number of different applications, and can be supplied with its own engine, in truck-driven machines, as well as tractor driven chippers.It has the capacity to process full length trees and logs up to a diameter of 50cm for softwood and up to a maximum diameter of 40cm for hardwood, as well as brushwood.

All Bruks mobile chippers are known for their high capacities, reliability, long service lives and operational flexibility.

PRODUCT INFORMATION:

Chipping features of 806.2 Chipper

Our time-tested Bruks technology ensures that wood flows smoothly through the chipper, minimizing dust, wear and energy consumption, while maintaining extremely high wood chip quality. The Bruks 806.2 features a particularly powerful infeed, very efficient chipping drums and our latest Bruks chip accelerator, delivering improved chip discharge.

Chipper unit

The chipper has a robust housing with a hydraulically driven feed unit offering high retraction forces. A built-in hydraulic motor drives the powerful 800mm upper roller. During operation, the roller rests on top of the material, but can easily be hydraulically lifted and lowered to exert downward force if needed. All rollers have hardened teeth to ensure high durability.

When the material has been cut, the chips pass through a chip screen into the hydraulically powered chip accelerator and through the chip tube.

The chipper has been designed for easy, safe maintenance. The knives are readily accessible through the hydraulically operated hood and to ensure high durability, wear parts are exchangeable and made of Hardox steel.

Drum chipper

To ensure superior chip quality, as well as high infeed speeds and chip

FACTS

TAGS:

- OFF ROAD
- TERMINAL

SUMMARY:

The 806.2 Chipper STC is a wood chipper to be used o for the production of fuel chips from forest residues.

PRODUCT AREA:

- CHIPPING

PRODUCT:

- CHIPPING

PLEASE CONTACT US FOR MORE INFORMATION

Sales Sweden / Norway / Denmark - Mobile Chippers

Daniel Larsson-Snygg
+46 70 670 17 65
daniel.larsson-snygg@bruks-siwertell.com

Sales Support - Mobile Chippers

Jonas Delin
+46 72 522 98 75
jonas.delin@bruks-siwertell.com

Export Sales - Mobile Chippers

Peter Håkansson
+46 70 821 08 20
peter.hakansson@bruks-siwertell.com

SCAN THE QR-CODE:
And view the Page online, where you will have access to more information

production, two full-length knives and a closed drum are specified as standard.

Several different drum versions are available to optimize the results, depending on the various types of wood chips required from the different raw materials. Chip length can be set and adjusted from 11 to 45mm.

Infeed table

The 806.2 has a long feed deck, equipped with three to five rollers, with an extremely low transport height. The outer rollers are chain driven by hydraulically powered inner rollers. The rollers have hardened teeth to ensure high durability and highly efficient infeeds.

The table's design makes it very easy to feed in a variety of materials from logging residues to whole trees and logs. We also offer table-sides, high or low, for different applications, and there are standard or heavy-duty versions, which can be configured to fit your needs.

Chip output: the chip accelerator and chip tube

Our latest chip accelerator offers a very powerful output and adjustable speed, independent of the engine's revolutions. This delivers an optimal and smooth chip discharge, and minimizes dust emissions as the chips are efficiently handled within the drum and chip tube. It has also been designed for minimal energy consumption.

We offer a number of size configurations for our chip tubes; high, low, long or short, which all facilitate optimal control of the chip output. They are all hydraulically controlled, and can be turned and folded, making transport easier for height restrictions.

The chip tubes are equipped with a hydraulically operated control deflector. In cases of very high productivity and wear and tear, the outer sweep of the tube can be exchanged, extending the service life of the overall tube.

TECH SPECIFICATION:

Product data sheet

Type	Value
Transport width (A) [mm]	2500
Transport height (A) [mm]	2180
Length infeed table (C) [mm]	1650
Width infeed (D) [mm]	850
Width infeed table (E) [mm]	2100
Weight complete unit approximately [metric ton]	4,6t
Diameter chipper drum [mm]	800
Infeed opening W x H [mm]	850 x 720
Adjustable chip length [mm]	10-45
Max diameter, softwood [mm]	500
Max diameter, hardwood [mm]	400
Capacity [m^3/h]	50-200
Recommended power (kW/hp)	220-485/300-650

Files:

Product Data Sheet 806.2 Chipper 2021 (251.21 KB)

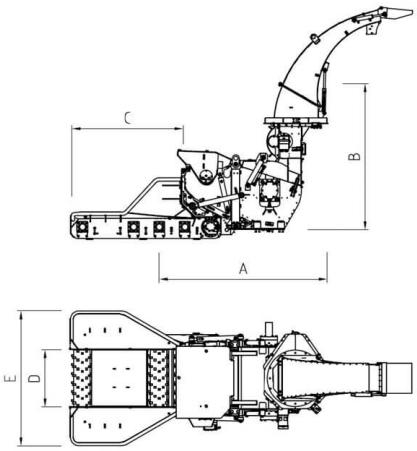

ACCESSORIES:

Optional Accessories:

Alternative Equipment

- Combination drum, full or half-length knives
- Drum with four-knives for micro-chips
- Chip screens available in various sizes
- Infeed table with a range of roller numbers and different table sides
- Chip tubes available in various sizes
- Chip deflectors, basic or dual
- Customized paintwork

Accessories

- Knife box
- Kits with knives and wear parts

RELATED PRODUCT ARTICLES:

- Mobile Chipper 806.2 PT Trailer
- Mobile Chipper 806.3 ST
- Mobile Chipper 806.3 STC
- Mobile Chipper 806.2 PT Truck
- Mobile Chipper 806.2 PTC Truck
- 1006 Chipper
- Mobile Chipper 1006.2 ST
- Mobile Chipper 1006 PT Truck
- Mobile Chipper 1006.3 RT